*Thank you for purchasing this Esco Laboratory Fume Hood. Please read this manual thoroughly to familiarize yourself with the many unique features and exciting innovations we have built into your new equipment. Esco provides many other resources at our website, www.escoglobal.com, to complement this manual and help you enjoy many years of productive and safe use of your Esco products.*

# User Manual


**For Technical Service, contact**
**North America**
*Esco Technologies, Inc.*
*2940 Turnpike Drive, Units 15-16 • Hatboro, PA 19040, USA*
*Toll-Free USA and Canada 1-877-479-3726*
*Tel 215-441-9661 • Fax 215-441-9660*
*us.escoglobal.com • usa@escoglobal.com*

**Rest of World**
*Esco Micro Pte. Ltd.*
*21 Changi South Street 1 • Singapore 486 777*
*Tel +65 6542 0833 • Fax +65 6542 6920*
*www.escoglobal.com • mail@escoglobal.com*


Frontier® ACELA™

High Performance
Laboratory Fume Hood


Esco High Performance Laboratory Fume Hood (EFA/EFF/EFI/EFP/EFQ & SXL) User Manual
Version A - Released May 2011

## Copyright Information

© Copyright 2011 Esco Micro Pte. Ltd. All rights reserved.
The information contained in this manual and the accompanying product is copyrighted and all rights are reserved by Esco.
Esco reserves the right to make periodic minor design changes without obligation to notify any person or entity of such change.
Sentinel® and Frontier® are registered trademarks of Esco.

*"Material in this manual is provided for informational purposes only. The contents and the product described in this manual (including any appendix, addendum, attachment or inclusion), are subject to change without notice. Esco makes no representations or warranties as to the accuracy of the information contained in this manual. In no event shall Esco be held liable for any damages, direct or consequential, arising out of or related to the use of this manual."*

# Table of Contents

**INTRODUCTORY PAGES**


i Table of Contents
iii Warranty Terms and Conditions
v Introduction
v 1. Products Covered
v 2. Safety Warning
v 3. Limitation of Liability
vi 4. European Union Directives on WEEE and RoHS
vii EFA Declaration of Conformation
viii EFF Declaration of Conformation
ix EFI Declaration of Conformation
x EFP Declaration of Conformation
xi EFQ Declaration of Conformation


**USER SECTION**


**1 Chapter 1 – Product Information**
1 1.1 About Frontier Acela Series Fume Hoods
1 1.2 Labels
2 1.3 Quick View
2 1.3.1 EFA Series Quick View
3 1.3.2 EFF Series Quick View
4 1.3.3 EFI Series Quick View
5 1.3.4 EFP Series Quick View
6 1.3.5 EFQ Series Quick View
7 1.3.6 EBA Series Quick View

**9 Chapter 2 – Control System and Operation**
9 2.1 Basic ON/OFF Control
9 2.2 General Fume Hood Operation

**11 Chapter 3 – Sentinel XL Monitoring System**
11 3.1 Sentinel XL Control System
12 3.2 Menu Options
12 3.2.1 Settings
12 3.2.2 Calibration
13 3.2.3 Admin

**15 Chapter 4 - Notes for Specialized Fume Hood**
15 4.1 Frontier Perchloric (EFP)
15 4.1.1 Final Purging (also applicable to EFI)
15 4.1.2 Unloading Materials and Equipment (also applicable to EFI)
15 4.1.3 Operating the Wash-Down Pump
15 4.1.4 Final Wash-Down Procedure
15 4.1.5 Maintaining the Wash-Down Pump

**17 Chapter 5 – Service and Maintenance**
17 5.1 Scheduled Maintenance
17 5.2 Maintenance/Service Log

**19 Chapter 6 – Troubleshooting**


**APPENDIX**

# Warranty Terms and Conditions

Esco products come with either a 1, 2 or 3 year limited warranty, depending on the product purchased, beginning on the date of shipment from any Esco international warehousing location. To determine which warranty applies to your product, refer to the appendix below.

Esco's limited warranty covers defects in materials and workmanship. Esco's liability under this limited warranty shall be, at our option, to repair or replace any defective parts of the equipment, provided if proven to the satisfaction of Esco that these parts were defective at the time of being sold, and that all defective parts shall be returned, properly identified with a Return Authorization.

This limited warranty covers parts only, and not transportation/insurance charges.

This limited warranty does not cover:

- Freight or installation (inside delivery handling) damage. If your product was damaged in transit, you must file a claim directly with the freight carrier.
- Products with missing or defaced serial numbers.
- Products for which Esco has not received payment.
- Problems that result from:
    - External causes such as accident, abuse, misuse, problems with electrical power, improper operating environmental conditions.
    - Servicing not authorized by Esco.
    - Usage that is not in accordance with product instructions.
    - Failure to follow the product instructions.
    - Failure to perform preventive maintenance.
    - Problems caused by using accessories, parts, or components not supplied by Esco.
    - Damage by fire, floods, or acts of God.
    - Customer modifications to the product
- Consumables such as filters (HEPA, ULPA, carbon, pre-filters) and fluorescent / UV bulbs.
- Esco is not liable for any damage incurred on the objects used on or stored in Esco equipment. If the objects are highly valuable, user is advised to have in place independent external preventive measures such as connection to a centralized alarm system.

Factory installed, customer specified equipment or accessories are warranted only to the extent guaranteed by the original manufacturer. The customer agrees that in relation to these products purchased through Esco, our limited warranty shall not apply and the original manufacturer's warranty shall be the sole warranty in respect of these products. The customer shall utilize that warranty for the support of such products and in any event not look to Esco for such warranty support.

Esco encourages all users to register their equipment online at www.escoglobal.com/warranty or complete the warranty registration form included with each product.

ALL EXPRESS AND IMPLIED WARRANTIES FOR THE PRODUCT, INCLUDING BUT NOT LIMITED TO ANY IMPLIED WARRANTIES AND CONDITIONS OF MERCHANTABILITY AND FITNESS FOR A PARTICULAR PURPOSE ARE LIMITED IN TIME TO THE TERM OF THIS LIMITED WARRANTY. NO WARRANTIES, WHETHER EXPRESS OR IMPLIED, WILL APPLY AFTER THE LIMITED WARRANTY PERIOD HAS EXPIRED. ESCO DOES NOT ACCEPT LIABILITY BEYOND THE REMEDIES PROVIDED FOR IN THIS LIMITED WARRANTY OR FOR SPECIAL, INDIRECT, CONSEQUENTIAL OR INCIDENTAL DAMAGES, INCLUDING, WITHOUT LIMITATION, ANY LIABILITY FOR THIRD-PARTY CLAIMS AGAINST YOU FOR DAMAGES, FOR PRODUCTS NOT BEING AVAILABLE FOR USE, OR FOR LOST WORK. ESCO'S LIABILITY WILL BE NO MORE THAN THE AMOUNT YOU PAID FOR THE PRODUCT THAT IS THE SUBJECT OF A CLAIM. THIS IS THE MAXIMUM AMOUNT FOR WHICH ESCO IS RESPONSIBLE.

These Terms and Conditions shall be governed by and construed in accordance with the laws of Singapore and shall be subject to the exclusive jurisdiction of the courts of Singapore.

**Technical Support, Warranty Service Contacts**
USA: 1-877-479-3726
Singapore: +65 65420833
Global Email Helpdesk: support@escoglobal.com
Visit http://www.escoglobal.com/ to talk to a Live Support Representative
Distributors are encouraged to visit the Distributor Intranet for self-help materials.

**Product Appendix, Warranty Listings**

| | |
|---|---|
| Biological Safety Cabinets, Laminar Flow Cabinets, HEPA-Filtered Cabinets (except Streamline brand) | The warranty periods for BSC may vary by country. Contact your local distributor for specific warranty details. |
| Laboratory Fume Hoods | 2 years limited. |
| Ductless Fume Hoods | 4 years limited for Ascent Opti, 6 years for Ascent Max. |
| Cleanroom Equipment | 1 year limited. |
| Laboratory Ovens and Incubators | 1 year limited. |
| $CO_2$ Incubators | 2 years limited. |
| Containment/Pharma Products | 2 years limited. |
| Ultralow Temperature Freezer | 3 years limited. 60 months on Compressor. |

The warranty period starts two months from the date your equipment is shipped from Esco facility for international distributors. This allows shipping time so the warranty will go into effect at approximately the same time the equipment is delivered to the user. The warranty protection extends to any subsequent owner during the warranty period. Distributors who stock Esco equipment are allowed an additional four months for delivery and installation, providing the product is registered with Esco. User can register product online at www.escoglobal.com/warranty or complete the warranty registration form included with each product.

Policy updated on 1st December 2011 (This limited warranty policy applies to products purchased on or after 1st January 2012)

# Introduction

## 1. Products Covered

| Esco High Performance Laboratory Fume Hood – Frontier Acela Family | | | | | |
|---|---|---|---|---|---|
| Model | Electrical Rating | 1.2 meters<br>4 feet | 1.5 meters<br>5 feet | 1.8 meters<br>6 feet | 2.4 meters<br>8 feet |
| Frontier Acela (EFA) | 230 V AC, 50/60 Hz, 1Φ | EFA - 4UDRVW - 8<br>EFA - 4UDRCW - 8 | EFA - 5UDRVW - 8<br>EFA - 5UDRCW - 8 | EFA - 6UDRVW - 8<br>EFA - 6UDRCW - 8 | EFA - 8UDRVW - 8 |
| | 110-120 V AC, 50/60Hz, 1Φ | EFA - 4UDRVW - 9<br>EFA - 4UDRCW - 9 | EFA - 5UDRVW - 9<br>EFA - 5UDRCW - 9 | EFA - 6UDRVW - 9<br>EFA - 6UDRCW - 9 | EFA - 8UDRVW - 9 |
| Frontier Floor Mounted (EFF) | 230 V AC, 50/60 Hz, 1Φ | EFF - 4UBRVW - 8<br>EFF - 4UBUVW - 8 | EFF - 5UBRVW - 8<br>EFF - 5UBUVW - 8 | EFF - 6UBRVW - 8<br>EFF - 6UBUVW - 8 | EFF - 8UBRVW - 8<br>EFF - 8UBUVW - 8 |
| | 110-120 V AC, 50/60Hz, 1Φ | EFF - 4UBRVW - 9<br>EFF - 4UBUVW - 9 | EFF - 5UBRVW - 9<br>EFF - 5UBUVW - 9 | EFF - 6UBRVW - 9<br>EFF - 6UBUVW - 9 | EFF - 8UBRVW - 9<br>EFF - 8UBUVW - 9 |
| Frontier Radioisotope (EFI) | 230 V AC, 50/60 Hz, 1Φ | EFI - 4UD4VW - 8<br>EFI - 4UD4CW - 8<br>EFI - 4UD6VW - 8<br>EFI - 4UD6CW - 8 | EFI - 5UD4VW - 8<br>EFI - 5UD4CW - 8<br>EFI - 5UD6VW - 8<br>EFI - 5UD6CW - 8 | EFI - 6UD4VW - 8<br>EFI - 6UD4CW - 8<br>EFI - 6UD6VW - 8<br>EFI - 6UD6CW - 8 | EFI - 8UD4VW - 8<br>EFI - 8UD6VW - 8 |
| | 110-120 V AC, 50/60Hz, 1Φ | EFI - 4UD4VW - 9<br>EFI - 4UD4CW - 9<br>EFI - 4UD6VW - 9<br>EFI - 4UD6CW - 9 | EFI - 5UD4VW - 9<br>EFI - 5UD4CW - 9<br>EFI - 5UD6VW - 9<br>EFI - 5UD6CW - 9 | EFI - 6UD4VW - 9<br>EFI - 6UD4CW - 9<br>EFI - 6UD6VW - 9<br>EFI - 6UD6CW - 9 | EFI - 8UD4VW - 9<br>EFI - 8UD6VW - 9 |
| Frontier Perchloric (EFP) | 230 V AC, 50/60 Hz, 1Φ | EFP - 4UD4VW - 8<br>EFP - 4UD4CW - 8<br>EFP - 4UD6VW - 8<br>EFP - 4UD6CW - 8 | EFP - 5UD4VW - 8<br>EFP - 5UD4CW - 8<br>EFP - 5UD6VW - 8<br>EFP - 5UD6CW - 8 | EFP - 6UD4VW - 8<br>EFP - 6UD4CW - 8<br>EFP - 6UD6VW - 8<br>EFP - 6UD6CW - 8 | EFP - 8UD4VW - 8<br>EFP - 8UD6VW - 8 |
| | 110-120 V AC, 50/60Hz, 1Φ | EFP - 4UD4VW - 9<br>EFP - 4UD4CW - 9<br>EFP - 4UD6VW - 9<br>EFP - 4UD6CW - 9 | EFP - 5UD4VW - 9<br>EFP - 5UD4CW - 9<br>EFP - 5UD6VW - 9<br>EFP - 5UD6CW - 9 | EFP - 6UD4VW - 9<br>EFP - 6UD4CW - 9<br>EFP - 6UD6VW - 9<br>EFP - 6UD6CW - 9 | EFP - 8UD4VW - 9<br>EFP - 8UD6VW - 9 |
| Frontier Acid Digestion (EFQ) | 230 V AC, 50/60 Hz, 1Φ | EFQ - 4UDCVW - 8<br>EFQ - 4UDCCW - 8 | EFQ - 5UDCVW - 8<br>EFQ - 5UDCCW - 8 | EFQ - 6UDCVW - 8<br>EFQ - 6UDCCW - 8 | EFQ - 8UDCVW - 8 |
| | 110-120 V AC, 50/60Hz, 1Φ | EFQ - 4UDCVW - 9<br>EFQ - 4UDCCW - 9 | EFQ - 5UDCVW - 9<br>EFQ - 5UDCCW - 9 | EFQ - 6UDCVW - 9<br>EFQ - 6UDCCW - 9 | EFQ - 8UDCVW - 9 |

**Note:** *MCB is not included with the fume hood*

## 2. Safety Warning

- Anyone working with, on or around this equipment should read this manual. Failure to read, understand and follow the instructions given in this documentation may result in damage to the unit, injury to operating personnel, and / or poor equipment performance.
- Any internal adjustment, modification or maintenance to this equipment must be undertaken by qualified service personnel.
- The use of any hazardous materials in this equipment must be monitored by an industrial hygienist, safety officer or some other suitably qualified individual.
- Before you process, you should thoroughly understand the installation procedures and take note of the environmental / electrical requirements.
- In this manual, important safety related points will be marked with the symbol. ⚠
- If the equipment is used in a manner not specified by this manual, the protection provided by this equipment may be impaired.

## 3. Limitation of Liability

The disposal and / or emission of substances used in connection with this equipment may be governed by various local regulations. Familiarization and compliance with any such regulations are the sole responsibility of the users. Esco's liability is limited with respect to user compliance with such regulations.

## 4. European Union Directive on WEEE and RoHS

The European Union has issued two directives:

• **Directive 2002/96/EC on Waste Electrical and Electronic Equipment (WEEE)**

This product is required to comply with the European Union's Waste Electrical & Electronic Equipment (WEEE) Directive 2002/96/EC. It is marked with the following symbol:

Esco sells products through distributors throughout Europe. Contact your local Esco distributor for recycling/disposal.

• **Directive 2002/95/EC on Restriction on the use of Hazardous Substances (RoHS)**

With respect to the directive on RoHS, please note that this hood falls under category 8 (medical devices) and category 9 (monitoring and control instruments) and is therefore exempted from requirement to comply with the provisions of this directive.

# Declaration of Conformation

In accordance to EN ISO/IEC 17050-1:2010

We, Esco Micro Pte. Ltd.
of 21 Changi South Street 1
Singapore, 486777
Tel: +65 6542 0833
Fax: +65 6542 6920

declare on our sole responsibility that the product:

**Category** : **High Performance Laboratory Fume Hood**
**Brand** : **Frontier Acela**
**Model** : **EFA - 4UDRVW - 8, EFA - 4UDRCW - 8, EFA - 5UDRVW - 8, EFA - 5UDRCW - 8, EFA - 6UDRVW - 8, EFA - 6UDRCW - 8, EFA - 8UDRVW - 8**

in accordance with the following directives:

**2006/95/EEC** : **The Low Voltage Directive and its amending directives**
**92/31/EEC** : **The Electromagnetic Compatibility Directive and its amending directives**

has been designed to comply with the requirement of the following Harmonized Standard:

**Low Voltage** : **EN 61010-1:2010**
**EMC** : **EN 61326-1:2006 Class B**
**Design/ Performance Criteria** : **ANSI/ASHRAE 110-1995**
**European Union Standard EN 14175-3**

More information may be obtained from Esco's authorized distributors located within the European Union. A list of these parties and their contact information is available on request from Esco.

**XQ Lin**
Group CEO, Esco

This Declaration of Conformity is only applicable for 230V AC 50/60Hz units

# Declaration of Conformation

In accordance to EN ISO/IEC 17050-1:2010

We, Esco Micro Pte. Ltd.
of 21 Changi South Street 1
Singapore, 486777
Tel: +65 6542 0833
Fax: +65 6542 6920

declare on our sole responsibility that the product:

**Category** : **Floor Mounted Fume Hood**
**Brand** : **Frontier Floor Mounted**
**Model** : **EFF - 4UBRVW - 8, EFF - 4UBUVW - 8, EFF - 5UBRVW - 8, EFF - 5UBUVW - 8, EFF - 6UBRVW - 8, EFF - 6UBUVW - 8, EFF - 8UBRVW - 8, EFF - 8UBUVW - 8**

in accordance with the following directives:

**2006/95/EEC** : **The Low Voltage Directive and its amending directives**
**92/31/EEC** : **The Electromagnetic Compatibility Directive and its amending directives**

has been designed to comply with the requirement of the following Harmonized Standard:

**Low Voltage** : **EN 61010-1:2010**
**EMC** : **EN 61326-1:2006 Class B**
**Design/ Performance Criteria** : **ANSI/ASHRAE 110-1995**
**European Union Standard EN 14175-3**

More information may be obtained from Esco's authorized distributors located within the European Union. A list of these parties and their contact information is available on request from Esco.

**XQ Lin**
Group CEO, Esco

This Declaration of Conformity is only applicable for 230V AC 50/60Hz units

# Declaration of Conformation

In accordance to EN ISO/IEC 17050-1:2010

We, Esco Micro Pte. Ltd.
of 21 Changi South Street 1
Singapore, 486777
Tel: +65 6542 0833
Fax: +65 6542 6920

declare on our sole responsibility that the product:

**Category** : **Radioisotope Fume Hood**
**Brand** : **Frontier Radioisotope**
**Model** : **EFI - 4UD4VW - 8, EFI - 4UD4CW - 8, EFI - 4UD6VW - 8, EFI - 4UD6CW - 8, EFI - 5UD4VW - 8, EFI - 5UD4CW - 8, EFI - 5UD6VW - 8, EFI - 5UD6CW - 8, EFI - 6UD4VW - 8, EFI - 6UD4CW - 8, EFI - 6UD6VW - 8, EFI - 6UD6CW - 8, EFI - 8UD4VW - 8, EFI - 8UD6VW - 8**

in accordance with the following directives:

**2006/95/EEC** : **The Low Voltage Directive and its amending directives**
**92/31/EEC** : **The Electromagnetic Compatibility Directive and its amending directives**

has been designed to comply with the requirement of the following Harmonized Standard:

**Low Voltage** : **EN 61010-1:2010**
**EMC** : **EN 61326-1:2006 Class B**
**Design/ Performance Criteria** : **ANSI/ASHRAE 110-1995**
**European Union Standard EN 14175-3**

More information may be obtained from Esco's authorized distributors located within the European Union. A list of these parties and their contact information is available on request from Esco.

**XQ Lin**
Group CEO, Esco

This Declaration of Conformity is only applicable for 230V AC 50/60Hz units

# Declaration of Conformation

In accordance to EN ISO/IEC 17050-1:2010

We, Esco Micro Pte. Ltd.
of 21 Changi South Street 1
Singapore, 486777
Tel: +65 6542 0833
Fax: +65 6542 6920

declare on our sole responsibility that the product:

**Category** : **Perchloric Acid Fume Hood**
**Brand** : **Frontier Perchloric**
**Model** : **EFP - 4UD4VW - 8, EFP - 4UD4CW - 8, EFP - 4UD6VW - 8, EFP - 4UD6CW - 8, EFP - 5UD4VW - 8, EFP - 5UD4CW - 8, EFP - 5UD6VW - 8, EFP - 5UD6CW - 8, EFP - 6UD4VW - 8, EFP - 6UD4CW - 8, EFP - 6UD6VW - 8, EFP - 6UD6CW - 8, EFP - 8UD4VW - 8, EFP - 8UD6VW - 8**

in accordance with the following directives:

**2006/95/EEC** : **The Low Voltage Directive and its amending directives**
**92/31/EEC** : **The Electromagnetic Compatibility Directive and its amending directives**

has been designed to comply with the requirement of the following Harmonized Standard:

**Low Voltage** : **EN 61010-1:2010**
**EMC** : **EN 61326-1:2006 Class B**
**Design/ Performance Criteria** : **ANSI/ASHRAE 110-1995**
**European Union Standard EN 14175-3**

More information may be obtained from Esco's authorized distributors located within the European Union. A list of these parties and their contact information is available on request from Esco.

**XQ Lin**
Group CEO, Esco

This Declaration of Conformity is only applicable for 230V AC 50/60Hz units

# Declaration of Conformation

In accordance to EN ISO/IEC 17050-1:2004

We, Esco Micro Pte. Ltd.
of 21 Changi South Street 1
Singapore, 486777
Tel: +65 6542 0833
Fax: +65 6542 6920

declare on our sole responsibility that the product:

**Category** : **Acid Digestion Fume Hood**
**Brand** : **Frontier Acid Digestion**
**Model** : **EFQ - 4UDCVW - 8, EFQ - 4UDCCW - 8, EFQ - 5UDCVW - 8, EFQ - 5UDCCW - 8, EFQ - 6UDCVW - 8, EFQ - 6UDCCW - 8, EFQ - 8UDCVW - 8**

in accordance with the following directives:

**2006/95/EEC** : **The Low Voltage Directive and its amending directives**
**92/31/EEC** : **The Electromagnetic Compatibility Directive and its amending directives**

has been designed to comply with the requirement of the following Harmonized Standard:

**Low Voltage** : **EN 61010-1:2010**
**EMC** : **EN 61326-1:2006 Class B**
**Design/ Performance Criteria** : **ANSI/ASHRAE 110-1995**
**European Union Standard EN 14175-3**

More information may be obtained from Esco's authorized distributors located within the European Union. A list of these parties and their contact information is available on request from Esco.

**XQ Lin**
Group CEO, Esco

This Declaration of Conformity is only applicable for 230V AC 50/60Hz units

# Chapter 1 - Product Information

## 1.1 About Frontier Acela Series Fume Hoods

Esco Frontier Acela is a world class laboratory fume hood design platform with patents and compliance to prove it. Precisely tuned aerodynamics, outstanding user safety, total systems and design flexibility, energy-efficiency, aesthetics and ergonomics- all supported by Esco's solutions-based sales and service representatives in more than 100 countries.

Esco Frontier Floor Mounted Fume Hood is designed to provide comfortable space when users have to deal with large apparatus and hazardous containers. Although this type of fume hood is sometimes denoted as a walk-in fume hood, it is a misnomer. The user must not enter the hood while an activity generating hazardous fumes exists or when suspected concentration of fumes exists inside the chamber.

Esco Frontier Radioisotope Fume Hood (EFI) is designed to be used when handling radioactive materials.

Esco Frontier Perchloric Fume Hood (EFP) is designed to be used when handling hot perchloric acid, hot nitric acid, or for routine use of perchloric acid. Do not handle sulfuric acid, acetic acid, organic solvents, or any combustible materials in perchloric acid hoods.

Esco Frontier PVC Acid Digestion Fume Hood (EFQ) is designed to be used when performing acid digestion applications. This fume hood is not meant for perchloric acid applications.

## 1.2 Labels

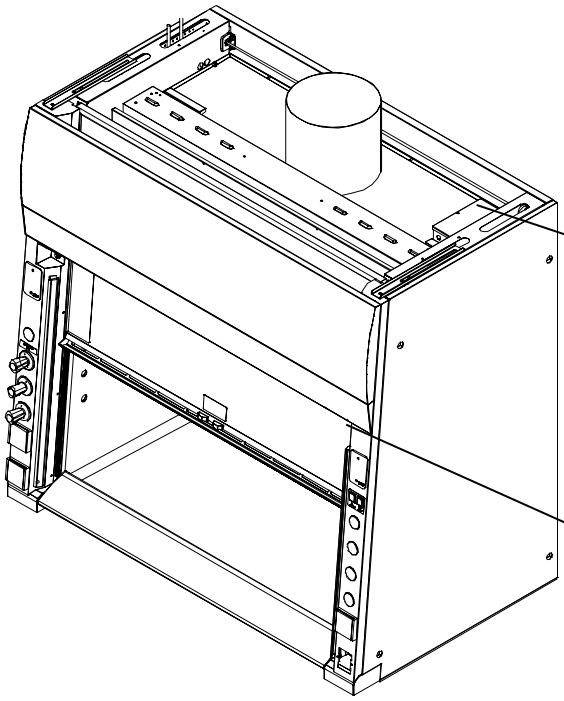

Electrical Requirement

CABINET POWER INLET
220 - 240VAC, 50Hz, 10A ,single phase
Damage may result if the cabinet is connected to an incorrect power source

Model - The model of the unit.
Serial - The serial number of the unit.
Power - The power consumption and electrical requirement of the unit.
Manufactured year - The year of manufacture.

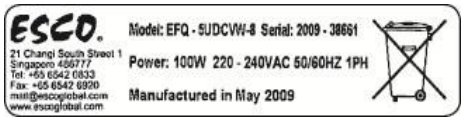

## 1.3 Quick View

### 1.3.1 EFA Series Quick View

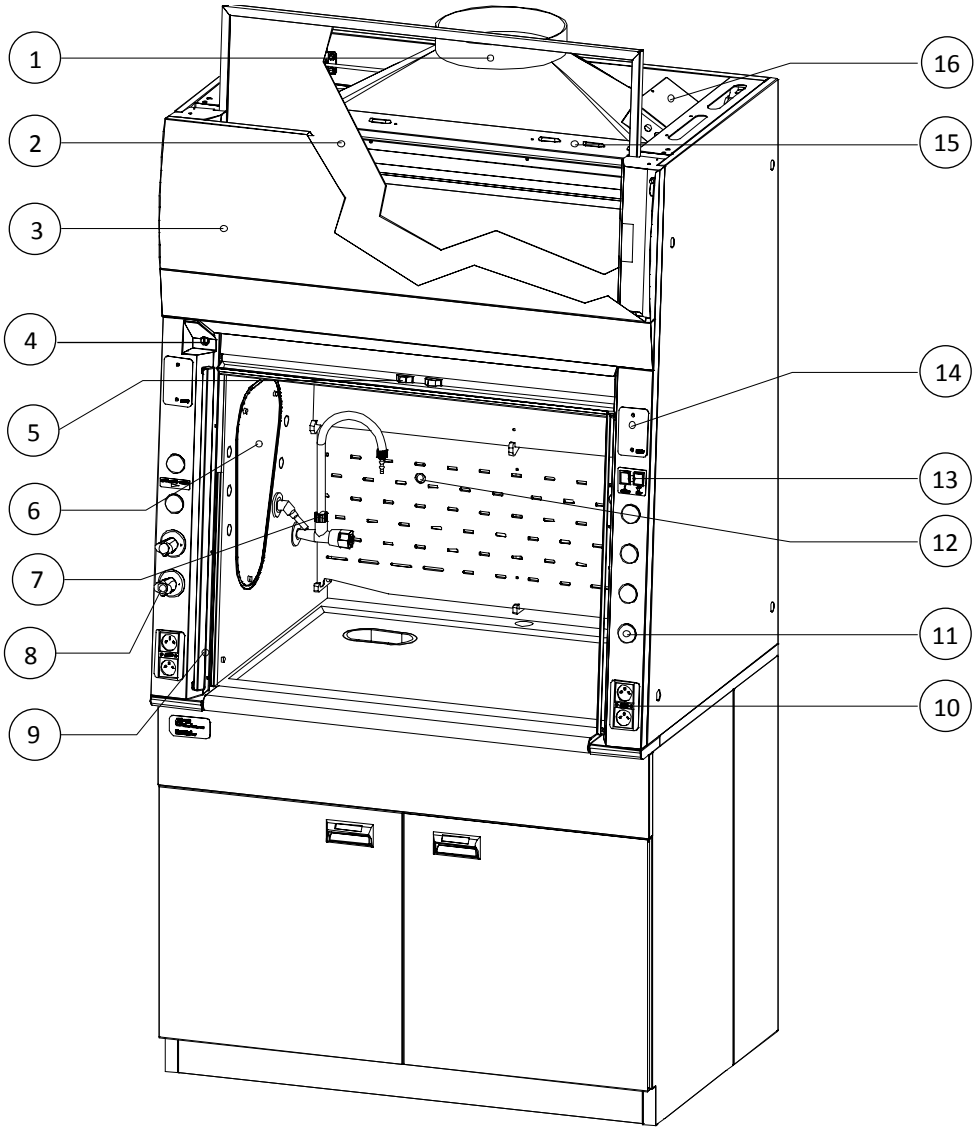


1. Tapered fiberglass exhaust collar
2. Tempered laminated framed sash glass
3. Removable front panel
4. Sash key lock
5. Sash stop
6. Side access panel
7. Swan-neck water faucet
8. Remote control fixture
9. Acela shaping vane
10. Electrical outlet
11. Service fixture provision
12. Distillation grid provision
13. Light and fan switch
14. Airflow alarm provision
15. Light housing
16. Electrical junction box

### 1.3.2 EFF Series Quick View

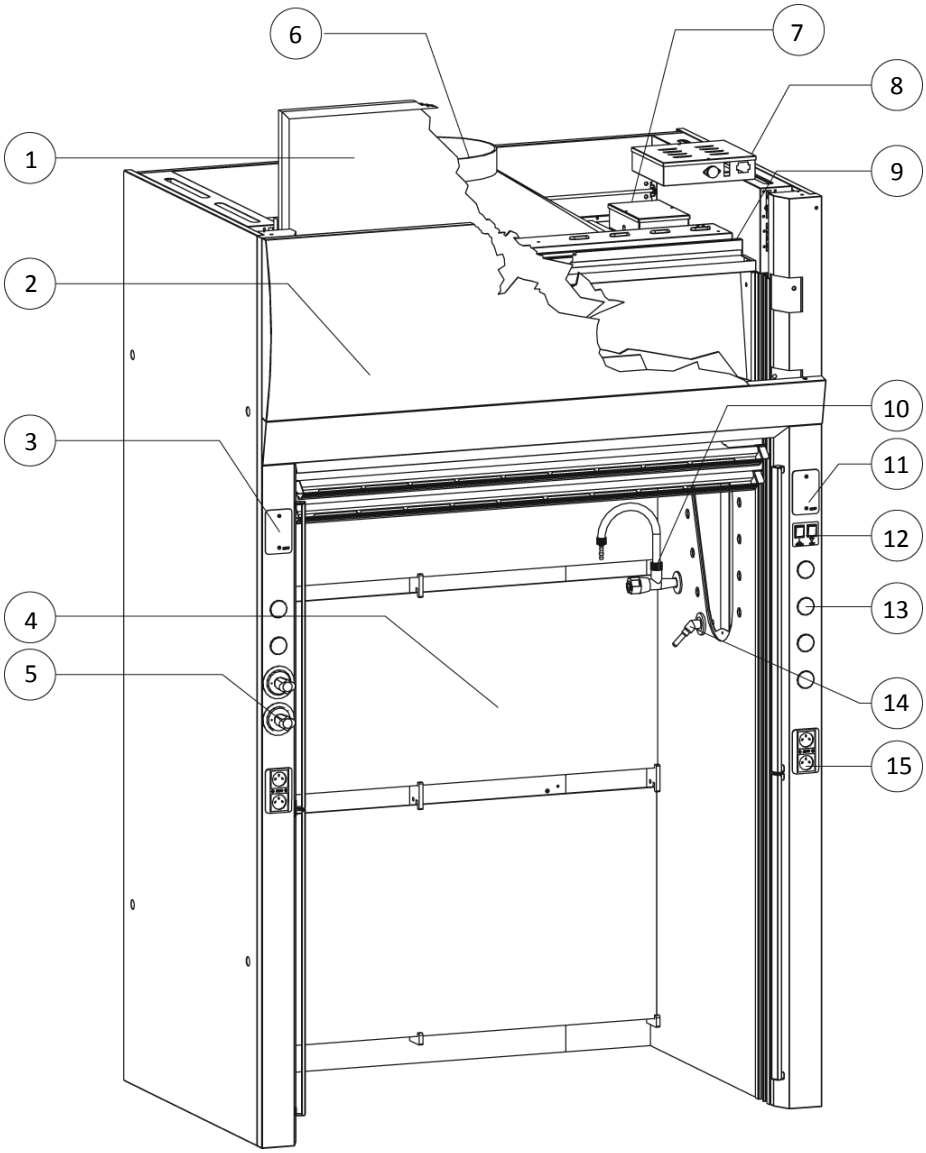


1. Vertical rising tempered laminated and framed sash glass
2. Removable front panel
3. Provision for additional outlet
4. Baffle
5. Fixture remote control
6. Tempered, low noise / pressure drop, fiberglass exhaust collar
7. Electrical wiring junction box
8. Airflow alarm electronics module (only if airflow alarm installed)
9. Light box
10. Cold water service fixture
11. Provision for Sentinel XL™
12. Light and fan switch
13. Provision for additional service fixture
14. Gas service fixture
15. Electrical outlet

### 1.3.3 EFI Series Quick View

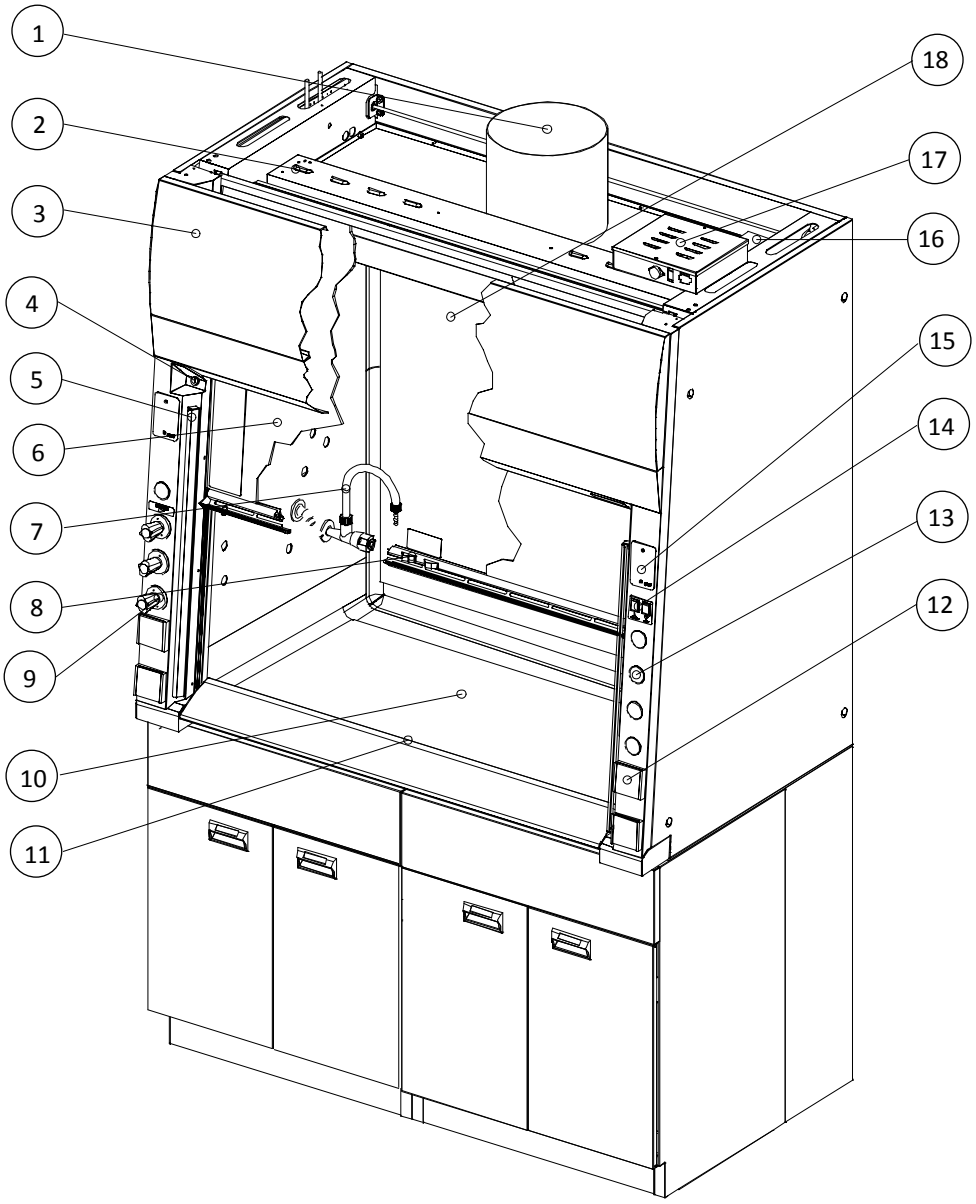


1. Welded stainless steel exhaust collar
2. Light housing
3. Removeable front panel
4. Sash key lock
5. Radioisotope shaping vane
6. Sash glass
7. Swan-neck water faucet
8. Sash Stop
9. Remote control fixture
10. Stainless steel inner chamber
11. Flush airfoil
12. Electrical outlet
13. Service fixture provision
14. Light and fan switch
15. Airflow alarm provision
16. Electrical junction box
17. Airflow alarm electronic module
18. Stainless steel baffle

### 1.3.4 EFP Series Quick View

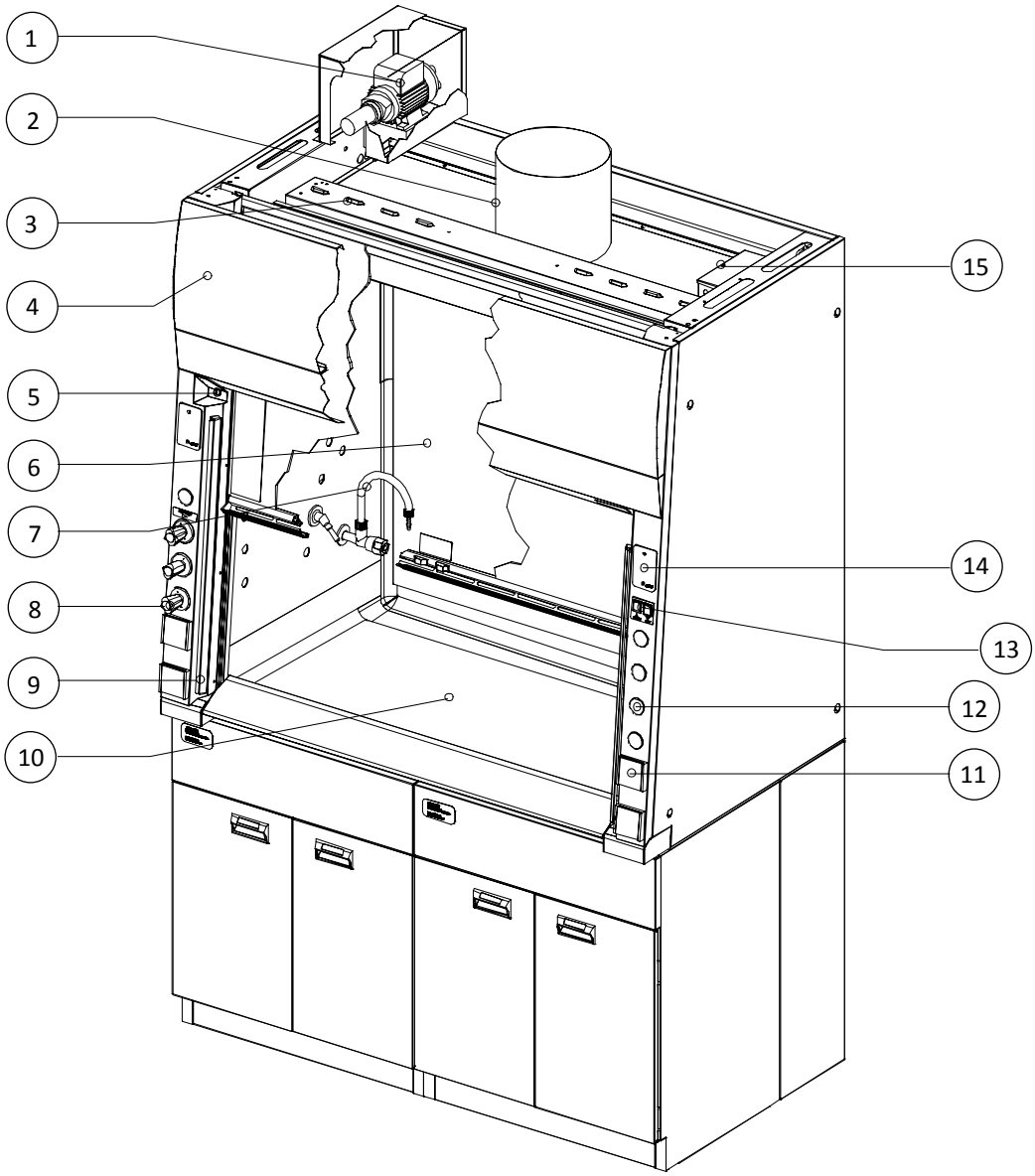


1. Water pump
2. Welded stainless steel exhaust collar
3. Light housing
4. Removable front panel
5. Sash key lock
6. Stainless steel baffle
7. Swan-neck water faucet
8. Remote control fixture
9. Acela shaping vane
10. Stainless steel inner chamber
11. Electrical outlet
12. Service fixture provision
13. Light and fan switch
14. Airflow alarm provision
15. Electrical junction box

### 1.3.5 EFQ Series Quick View

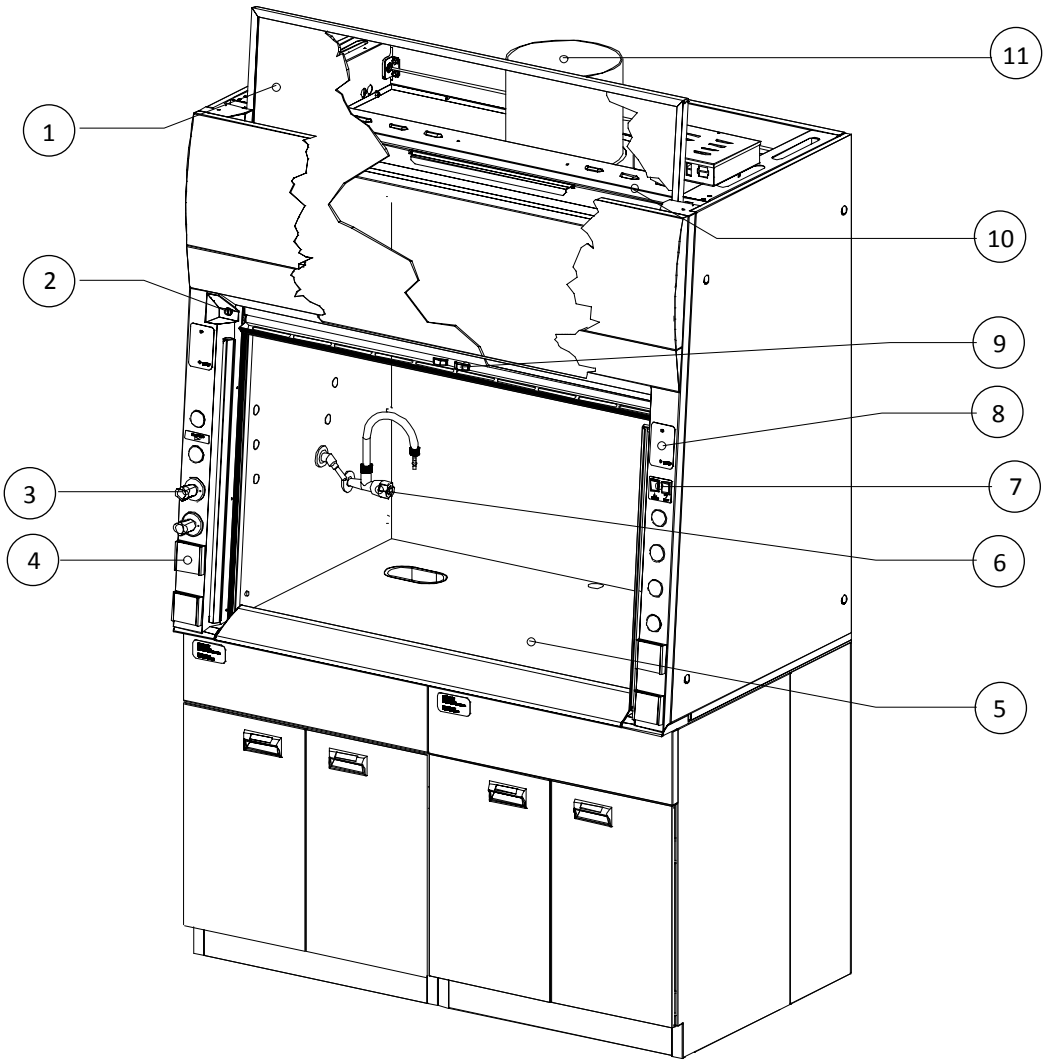


1. Polycarbonate sash
2. Sash key lock
3. Remote control fixture
4. Electrical outlet
5. uPVC inner chamber
6. Swan-neck water faucet
7. Light and fan switch
8. Airflow alarm provision
9. Sash Stop
10. Light housing
11. Exhaust collar

### 1.3.6 EBA Series Quick View

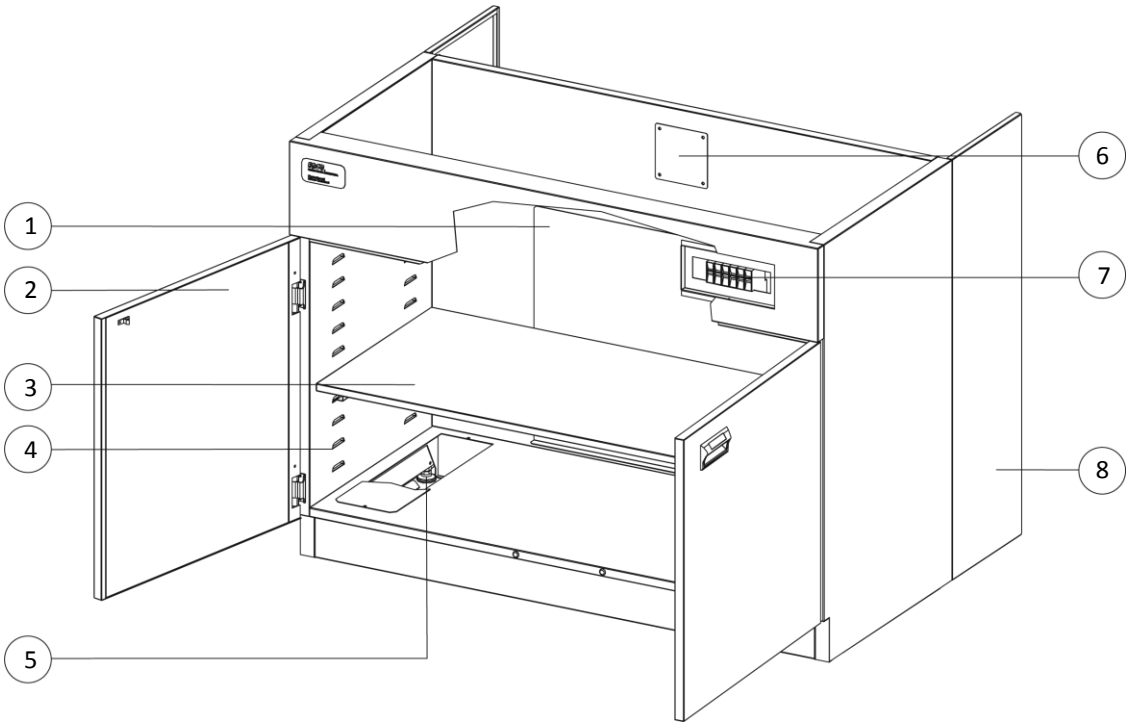


1. Rear access panel
2. Soft close door
3. Adjustable shelf
4. Adjustable shelf slot
5. Base cabinet height leveler
6. Ventilation provision
7. MCB/ELCB set (optional)
8. Base cabinet filler panel (optional)

# Chapter 2 – Control System and Operation

## 2.1 Basic On/Off Control

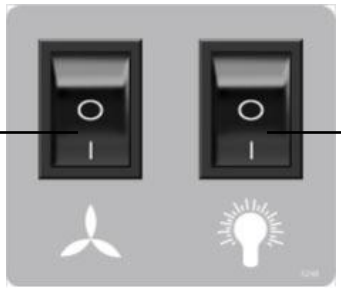


1. Fan Switch
   - Turns the external exhaust blower on and off (if connected).

2. Lamp Switch
   - Turns the fluorescent lamps on and off.

## 2.2 General Fume Hood Operation

- Follow your laboratory procedure on the use of personnel protective equipment and fume hood.
- Ensure the exhaust is operating before commencing work.
- Keep your head outside of the hood.
- Work as far into the hood as possible and with slow, deliberate movements, to minimize airflow disturbances.
- Work with the sash as fully lowered as possible, utilizing the sash as a natural barrier to accidents which may occur in the hood.
- If a combination sash is installed, do not open the vertical and horizontal sashes simultaneously.
- Do not use this hood as a storage area. Items can block airflow and interfere with containment.
- Do not let organic chemicals evaporate in the hood – use a proper waste bottle. Do not leave uncapped bottles of chemicals or waste in a hood.
- If performance is suspected, or an airflow alarm is triggered (if installed), terminate usage, close the sash completely, and cease work.
- Do not use perchloric acid in a fume hood unless it is specially designed for this purpose. Explosive perchlorate salts could accumulate in the exhaust system.
- Minimize external airflow disturbances, including foot traffic.
- Certify this hood annually to verify airflow velocity, smoke patterns and containment.
- Perform routine maintenance in accordance with the manufacturer's instructions.
- In case of spills, please refer to the laboratory procedure.

# Chapter 3 – Sentinel XL Monitoring System

## 3.1 Sentinel XL Control System

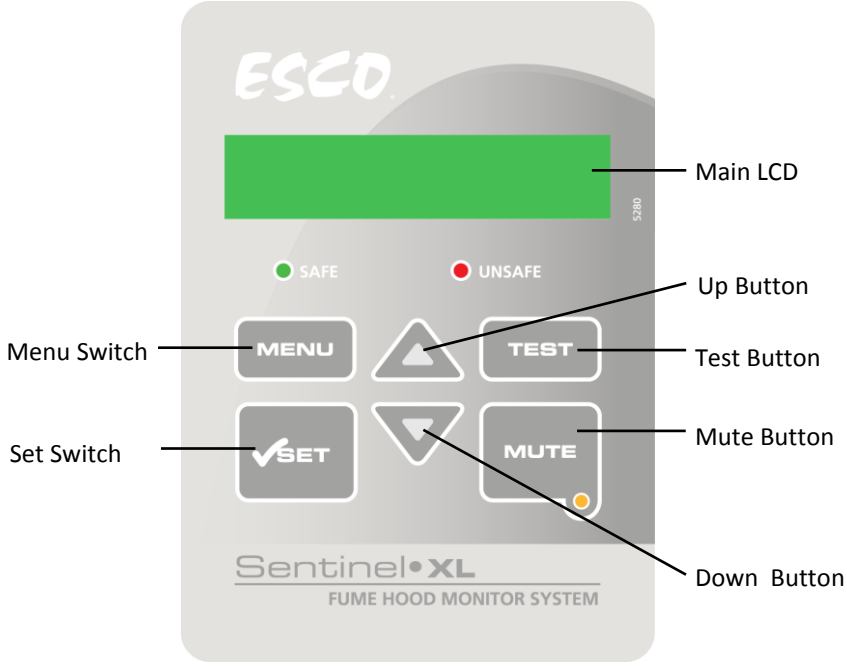


**LCD Display**

- Displays the face velocity value, the face velocity condition, and also operational messages and alarm messages.

**SAFE and UNSAFE Indicator Lights**

- Indicate whether the fume hood is in a safe or unsafe state of operation.

**MENU Button**

- Enters and exits from the menu options
- Goes back to the previous level of the menu options
- Goes back from the diagnostic data display

**SET Button**

- Chooses the menu or sub-menu currently displayed on the LCD display
- Proceeds to the next step or sequence inside one of the menu options
- Accesses the fume hood diagnostic data (useful for service technician)

**UP and DOWN Button**

- Moves upwards and downwards the menu options
- Increases and decreases corresponding value inside one of the menu options.

**TEST Button**

- Performs the fume hood self-test procedure. The procedure will check the functionality of the components inside the control system.

**MUTE button**

- Used to disable/enable the audible alarm.
- The yellow LED indicator turns on when the alarm is muted. The alarm can be muted either temporarily or permanently.
    - The alarm is muted temporarily if the MUTE button is pressed once. The audible alarm will be enabled again when a safe state has been reached, or the MUTE button is pressed again.
    - The audible alarm is muted permanently when the MUTE button is pressed twice within two seconds.

  The audible alarm can be enabled again by pressing the MUTE button. The audible alarm is always enabled after power off or reset.

## 3.2 Menu Options

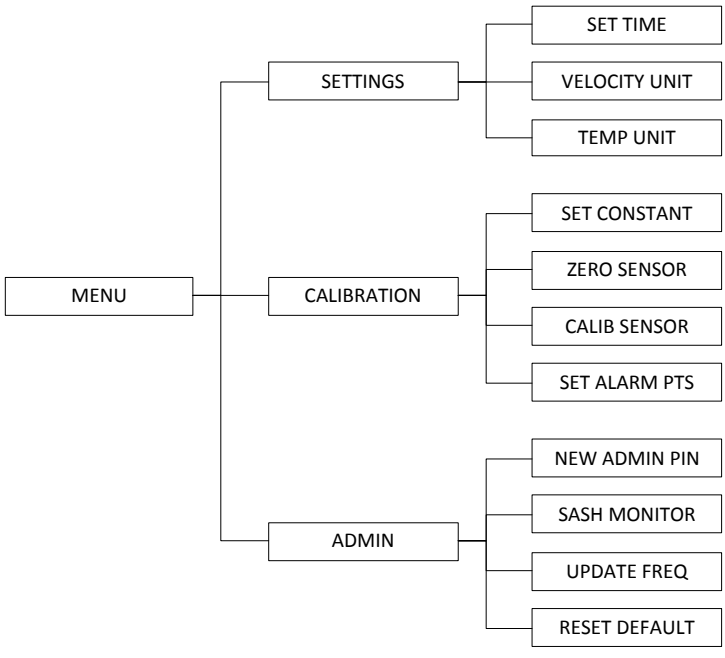


### 3.2.1 SETTINGS

#### 3.2.1.1 SET TIME

Users can set the time of the day by adjusting the hour and minute. The correct time will be maintained even after the unit is turned off.

#### 3.2.1.2 VELOCITY UNIT

Using this option, user can change the air velocity unit from meters per second (m/s) to feet per minute (fpm) and vice versa. This will affect the display of the face velocity when the fan is running, and the velocity unit during calibration.

#### 3.2.1.3 TEMP UNIT

Using this option, user can change the temperature unit from Celsius to Fahrenheit and vice versa. This will affect the display of the air temperature in the diagnostic data.

### 3.2.2 CALIBRATION

The purpose of calibrating the controller is to let the controller record particular output voltages from the face velocity sensor and relate them to air velocity values. Once the calibration is completed, the control system will be able to show the air velocity.

Calibration should be done at initial operation, when the face velocity accuracy is in question, and at least once a year.

### 3.2.3 ADMIN

#### 3.2.3.1 NEW ADMIN PIN

ADMIN PIN restricts access to MENU functions, including service functions such as calibration. User must enter four-digit PIN before accessing MENU.

Setting PIN to 0000 will disable this feature. This feature is disabled by default.

#### 3.2.3.2 SASH MONITOR

This option enables or disables the sash alarm. When enabled, an alarm will be activated when the sash opening height is detected to be more than the height determined during micro switch installation.

#### 3.2.3.3 UPDATE FREQ

This option sets the velocity display update frequency. The default is NORMAL. The velocity display update can be set faster or slower. Each step doubles the update frequency or cuts it in half. With a slower velocity display update, the velocity reading is less affected by brief face velocity disturbances.

#### 3.2.3.4 RESET DEFAULT

User can reset the default setting by choosing this option. The features being reset are the velocity unit (m/s), the temperature unit (Celsius), the ADMIN PIN (0000), and the sash monitor setting (disabled). Note that the calibration settings are not reset to prevent the fume hood being unsafe to use.

# Chapter 4 – Notes for Specialized Fume Hood

*Always follow your laboratory procedure for using chemicals in the fume hood.*

## 4.1 Frontier Perchloric (EFP)

Frontier Perchloric has a wash-down control valve on the lower left-hand side that controls water to the wash-down spray nozzles. The nozzles are located behind the hood baffle and will wash-down areas in the hood, which are inaccessible without removing the baffle.

### 4.1.1 Final Purging (also applicable to EFI)

- Upon completion of work, the hood should be allowed to operate for two to three minutes undisturbed, to purge airborne contaminants from the work area before shutting down blower.

### 4.1.2 Unloading Materials and Equipment (also applicable to EFI)

- Objects in contact with contaminated material should be surface decontaminated before removal from the hood.
- All open trays or containers should be covered before being removed from the hood.

### 4.1.3 Operating the Wash-Down Pump

- Keep the pump connected to the electrical socket at all times
- Open the Wash-Down valve to allow water to flow into the pump - this will switch the pump on. To switch the pump off and end the wash-down cycle, simply close the Wash-Down valve.
- Only use clean water without any abrasive particles and liquids that are chemically non aggressive to cast iron (the materials from which the pump is made)

### 4.1.4 Final Wash-Down Procedure

- Water wash-down or flooding the surfaces with water is standard practice and results in reduction of contamination on the stainless steel liner material due to perchloric acid.
- Proper operation of your perchloric acid fume hood requires that you wash the fume removal system down sufficiently to ensure that there is no build-up of perchloric acid salts within the entire system.
- Normal wash down procedures suggest that you run the wash system in the exhaust duct with the fan on for approximately 1-2 minutes, and then with the fan off for approximately 10 minutes to thoroughly clean this portion of the exhaust system.
- In addition to this, the internal hood spray nozzles should be activated for approximately 10 minutes after the completion of your procedures to clean behind the baffle in the hood. Work areas in front of the baffle in the hood will need to be cleaned directly by the operator. Because the volume of Perchloric acid can vary greatly due to specific procedures and workloads, you should consult your in-house Safety Officer for specific rules and frequency requirements for washing down your total system.

### 4.1.5 Maintaining the Wash-Down Pump

- Before doing anything, make sure that pump is disconnected from the power source and that there is no possibility of accidental connections.
- Repair of the pump by personnel not authorized by the manufacturer will render the guarantee null and void and will entail operating with potentially dangerous equipment.

# Chapter 5 – Service and Maintenance

## 5.1 Scheduled Maintenance

Proper and timely maintenance is crucial for trouble free functioning of any device and your Esco fume hood is no exception to this rule. We strongly recommend that you follow the maintenance schedule suggested hereunder in order to obtain optimal performance from your Esco fume hood.

| No. | Description of Task to Perform | Maintenance to be carried out every | | | |
|---|---|---|---|---|---|
| | | Week | Month | Quarter | 1 Year |
| 1 | Clean the interior work surface and walls | √ | | | |
| 2 | Clean the sash and all glass surfaces | √ | | | |
| 3 | Airflow patterns check using a source of visible smoke | √ | | | |
| 4 | Inspect the controls of the services to the fume hood | | √ | | |
| 5 | Clean the exterior surfaces of the fume hood | | √ | | |
| 6 | Check for any blockages at the hood baffles | | √ | | |
| 7 | Determine the face velocity and ensure that the hood is operating properly | | √ | | |
| 8 | Inspect the fume hood for any physical abnormalities or malfunction | | | √ | |
| 9 | Check the sash for proper operation | | | √ | |
| 10 | Change the fluorescent lamps | | | | √ |
| 11 | Re-certification | | | | √ |
| 12 | Check & clean the ducting system | | | | |

**Cleaning the fume hood**

- Clean the work surface and walls with appropriate disinfectant agent and soap water afterward
- Clean the sash window using an appropriate disinfectant agent and glass cleaner afterward
- Use a damp cloth to clean the exterior surface of the fume hood, particularly on the front and top in order to remove dust that accumulated there
- Use clean water to finish the cleaning and wash away any residue of disinfectant agent, soapy water and glass cleaner
- For removing stubborn stains or spots on the stainless steel surface, make use of MEK (Methyl-Ethyl-Ketone). In such cases, make sure that you wash the steel surface immediately afterwards with clean water and some liquid detergent. Use a polyurethane cloth or sponge for washing. Regularly cleaning the stainless steel surface can help you retain the attractive factory finish.
- Ensure that there's no blockage in and behind the baffle

**Check the hood's functionality**

- Check the hood's mechanical functionality; ex: sash window – lubricate if necessary
- Check the hood's electrical functionality; ex: fluorescent lamp – replace if necessary
- Check the hood for any defect, repair immediately
- Check the hood's airflow pattern and face velocity to ensure that the hood is functioning properly

**Re-certification**

All fume hoods must be re-certified annually by a certified engineer. See test report for recertification procedure.

**Check and clean the ducting system**

## 5.2 Maintenance/Service Log

It is good practice (and in some cases regulatory requirement) to maintain a log of all maintenance work carried out on your cabinet.

# Chapter 6 – Troubleshooting

Under no circumstances should the unit be disassembled, repaired, or converted by unqualified people. Failure to follow these instructions may cause personnel injury and/or loss of property due to malfunctions, electric shocks or fire.

Should the unit malfunction, stop the operation, and then pull out the power plug or turn off the power supply at source. Continuing to operate the unit when it shows signs of malfunctioning may cause electric shocks or fire.

The following troubleshooting are some of the basic problems that can be solved by the user or operator. However if the problem persist, please contact your local distributor.

| Problem | Possible Cause |
|---|---|
| The hood does not work | Ensure that the hood is connected to the building power line |
| | Ensure that the exhaust blower/fan is connected to the building power line |
| | Ensure that none of the circuit breaker is tripped |
| The hood show poor performance | Ensure that the hood is not overloaded |
| | Ensure that the exhaust blower/fan rated correctly for this function |
| | Ensure that the exhaust blower/fan set correctly for this function – request your distributor to re-certify the system and re-set the exhaust blower/fan |
| The hood's lamp does not work | Ensure that the lamps are switched on by using the LIGHT SWITCH |
| | Ensure that the hood is connected to the building power line |
| | If problem persist – contact your local distributor |
| The hood's electrical outlet does not work | Ensure that the hood is connected to the building power line |
| | If problem persist – contact your local distributor |
| The hood's service fixture does not work | Ensure that the service line(s) are connected properly |
| | Ensure that the source (water/gas/vacuum) is active or available |
| | If problem persist – contact your local distributor |

# APPENDIX

# LOG RECORD

Fume Hood : ______________________________________________

Serial Number : ______________________________________________

Person in Charge : ______________________________________________

1. This log record should be used by the operator to record any new chemicals that has been introduced to the fume hood during its operation, problems encountered, etc.
2. Please also record any major maintenance procedure performed by the service technician, for example: parts replacement, recertification, etc.

| Date | Event | User Signature | Supervisor Signature |
|---|---|---|---|
| | | | |
| | | | |
| | | | |
| | | | |
| | | | |
| | | | |
| | | | |
| | | | |
| | | | |
| | | | |
| | | | |
| | | | |
| | | | |
| | | | |
| | | | |
| | | | |
| | | | |
| | | | |
| | | | |
| | | | |
| | | | |
| | | | |
| | | | |
| | | | |
| | | | |
| | | | |
| | | | |
| | | | |
| | | | |
| | | | |
| | | | |
| | | | |
| | | | |
| | | | |
| | | | |
| | | | |

In case of emergencies, please call:

Name : ______________________________________________

Cell Phone Number : ______________________________________________

E-mail : ______________________________________________